Product data sheet

Binder connectors

Adapter for panel mount connectors

Rear fastened

08 2433 000 001
https://www.ac-solutions.be/en/product/082433000001

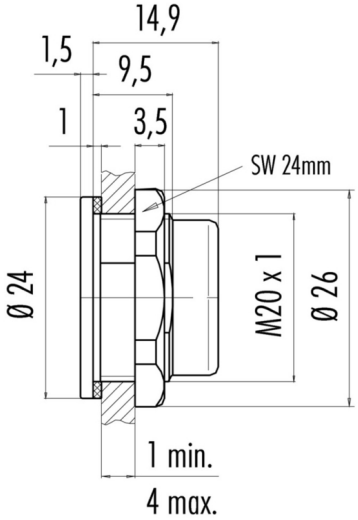

Specifications

General Characteristics

Series	Miniature
Subseries	720
Connector Diameter	24 mm