Product data sheet

Binder connectors

Male panel mount connector

Dip solder, front fastened

UL-approval

09 0127 99 07
https://www.ac-solutions.be/en/product/0901279907

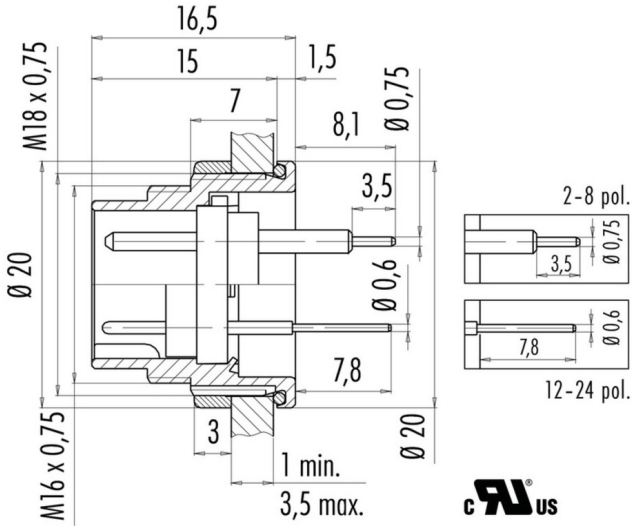

Specifications

General Characteristics

Screw size	M16
Series	Miniature
Subseries	423-723-425
Gender	Male
Number of contacts	7
Contact terminal	Dip solder
Upper temperature	+95 °C
Lower temperature	-40 °C
Protection degree	IP67
Locking system	Screw (M16)
Mating cycles	>500
Connector Diameter	20 mm
Wire-section	0.75 mm²
Remark*	*In case of pollution degree 2, overvoltage category II rated voltage is reduced to 32 V.

Product data sheet

Binder connectors

Male panel mount connector

Electrical parameters

Nominal current	5 A
Nominal voltage	125 (32) V
Impuls voltage	800 V
Max. contact resistance	3 m?
Pollution degree	1 (2)*
Overvoltage categorie	I (II)*

Material

Material group	III
Material of insert	PBT (UL 94 V-0)
Material of housing	Zinc diecasting nickel plated
Material of contact	CuZn (Brass)
Plating	Au (Gold)