Product data sheet

Techno connectors

Multipole cable reduction

3holes Ø max 2.8 mm

6000520GT
https://www.ac-solutions.be/en/product/6000520gt

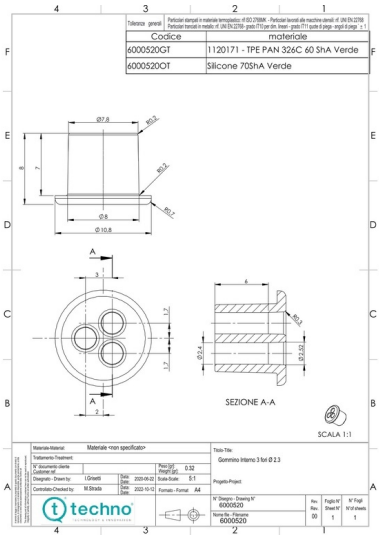

Specifications

General Characteristics

Series	TEEPLUG
Color	green
Min-max cable diameter	2,20 - 2,80 mm
Lower temperature	-40 °C
Upper temperature	+100 °C