Product data sheet

Techno connectors

Closure cap for THx.391.Lxx/THx.391.Txx

6DB025200
https://www.ac-solutions.be/en/product/6db025200

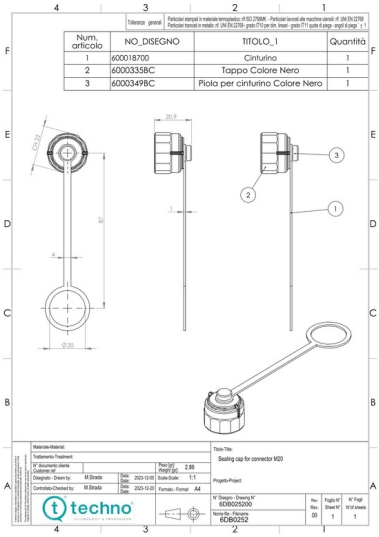

Specifications

General Characteristics

Color	black