Product data sheet

Techno connectors

TH381 Closure cap for plug M16

6DB057400
https://www.ac-solutions.be/en/product/6db057400

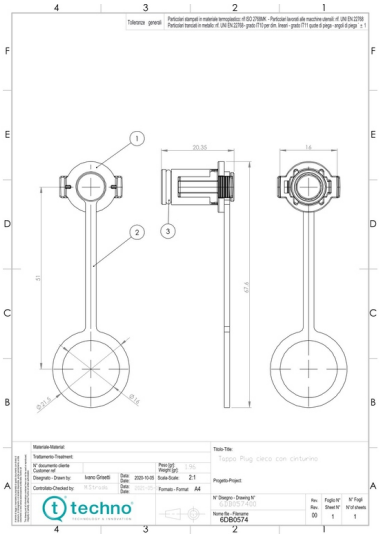

Specifications

General Characteristics

Series	TEEPLUG
Color	black
Lower temperature	-40 °C
Upper temperature	+125 °C