Product data sheet

HUMMEL connectors

Bus End Connector

Closed type

7.105.000.000
https://www.ac-solutions.be/en/product/7105000000



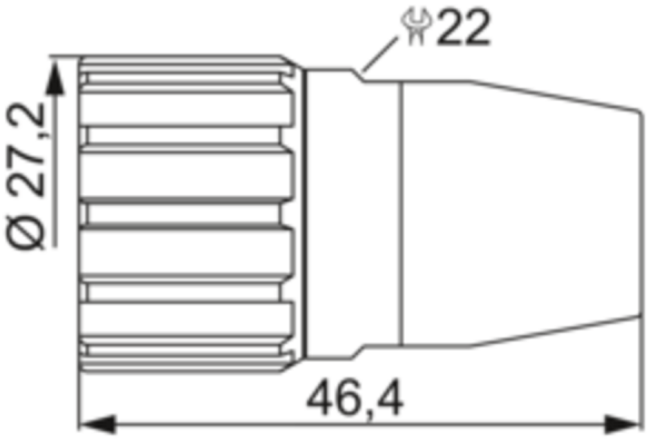

Specifications

General Characteristics

Accessory type	Adapter
Colour	Silver light (nickel plated)
Shape	Round
Locking type	Screw
Protection class	IP67/IP69K
Temperature range	-40 to +125
Remark	Used to cap an open male connector in bus-systems

Material

Material	Copper-Zinc alloy, Die casting
Material seals/o-rings	NBR