Product data sheet

HUMMEL connectors

Twilock, Straight Connector, Female Thread

7.166.600.000
https://www.ac-solutions.be/en/product/7166600000



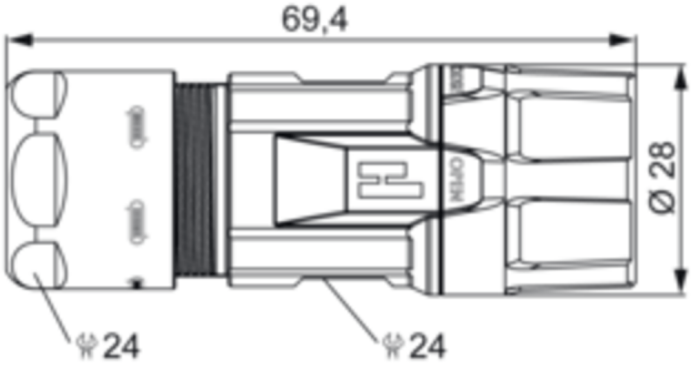

Specifications

General Characteristics

Size	M23 Signal
Gender of required insert	Male/Female
Connector diameter	28 mm
Upper temperature	125 °C
Lower temperature	-40 °C
Connector locking system	Twilock
Protection degree	IP67/IP69K
Mating cycles	>1000
Cable diameter	11 - 17 mm

Material

Housing material	Copper-Zinc alloy, Die casting
Housing plating	Nickel plated