Product data sheet

HUMMEL connectors

Straight Connector, Male Thread

EMC,Stainless Steel

7.241.400.000
https://www.ac-solutions.be/en/product/7241400000



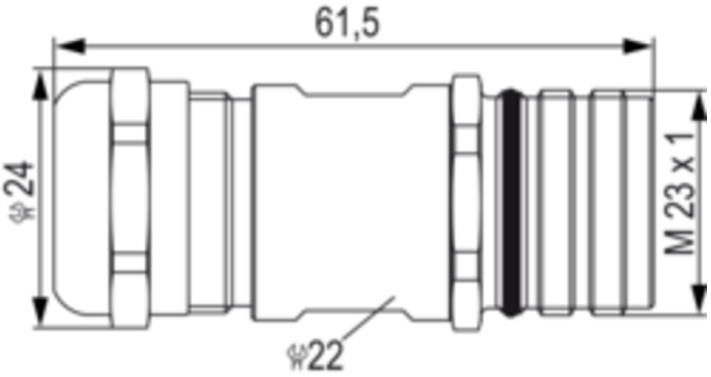

Specifications

General Characteristics

Size	M23 Signal
Gender of required insert	Male/Female
Upper temperature	125 °C
Lower temperature	-40 °C
Connector locking system	Screw
Protection degree	IP67/IP69K
Mating cycles	> 1000
Cable diameter	5 - 10 mm

Material

Housing material	Copper-Zinc alloy, Die casting
Housing plating	Nickel plated