# Product data sheet

## HUMMEL connectors

### Right Angle Connector, Female Thread with positioning

7.300.500.000
https://www.ac-solutions.be/en/product/7300500000



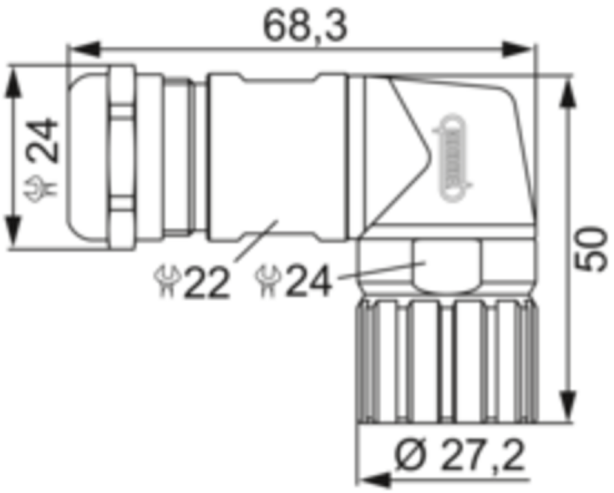


## Specifications

### General Characteristics

| | |
|---|---|
| **Size** | M23 Signal |
| **Gender of required insert** | Male/Female |
| **Connector diameter** | 27.2 mm |
| **Upper temperature** | 125 °C |
| **Lower temperature** | -40 °C |
| **Connector locking system** | Screw |
| **Protection degree** | IP67/IP69K |
| **Mating cycles** | > 1000 |
| **Cable diameter** | 7 - 12 mm |

### Material

| | |
|---|---|
| **Housing material** | Copper-Zinc alloy, Die casting |
| **Housing plating** | Nickel plated |