Product data sheet

HUMMEL connectors

Twilock, Right Angle Panel Connector, Male Thread

330° rotable, hole mounted

flange 25 x 25 mm

7.439.000.000
https://www.ac-solutions.be/en/product/7439000000



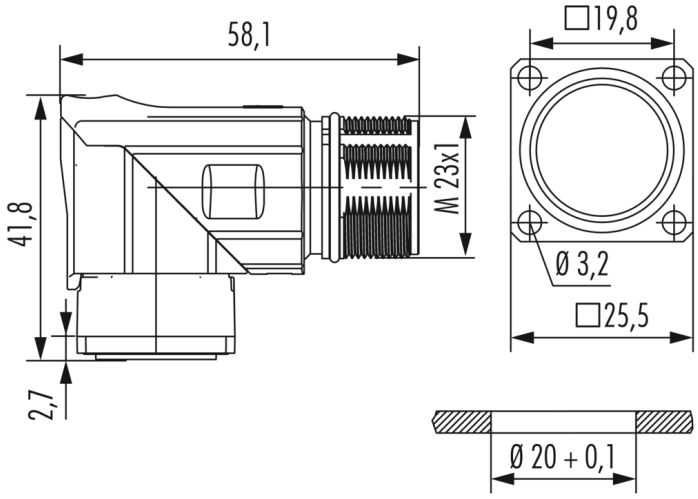

Specifications

General Characteristics

Size	M23 Signal
Gender of required insert	Male/Female
Upper temperature	125 °C
Lower temperature	-40 °C
Connector locking system	Twilock
Protection degree	IP67/IP69K
Mating cycles	> 1000
Holes	4 holes Ø 3,2 mm

Material

Housing material	Copper-Zinc alloy, Die casting
Housing plating	Nickel plated