Product data sheet

HUMMEL connectors

Panel Connector, Male Thread

Rear Mounting

single hole mounted

7.458.000.000
https://www.ac-solutions.be/en/product/7458000000



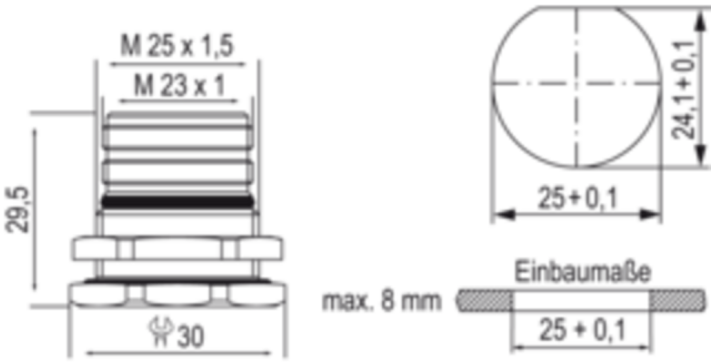

Specifications

General Characteristics

Size	M23 Signal
Gender of required insert	Male/Female
Upper temperature	125 °C
Lower temperature	-40 °C
Connector locking system	Twilock
Protection degree	IP67/IP69K
Mating cycles	> 1000
Thread	M25 x 1,5
Remark 1	Including jam nut M 25 x 1,5
Remark 2	No compatibility with TWILOCK

Material

Housing material	Copper-Zinc alloy, Die casting
Housing plating	Nickel plated