Product data sheet

HUMMEL connectors

Twilock-S, Straight Connector, Female Thread

7.556.600.00S
https://www.ac-solutions.be/en/product/755660000s



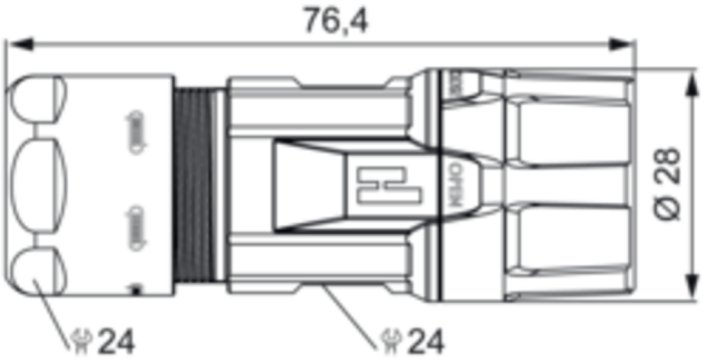

Specifications

General Characteristics

Size	M23 Power
Gender of required insert	Male/Female
Connector diameter	28 mm
Upper temperature	125 °C
Lower temperature	-40 °C
Connector locking system	Twilock
Protection degree	IP67/IP69K
Mating cycles	>1000
Cable diameter	11-17 mm
Remark 1	Compatible to Speedtec

Material

Housing material	Copper-Zinc alloy/ Die casting
Housing plating	Nickel plated