Product data sheet

HUMMEL connectors

Right Angle Connector, Male Thread

Rotating

7.580.500.000
https://www.ac-solutions.be/en/product/7580500000



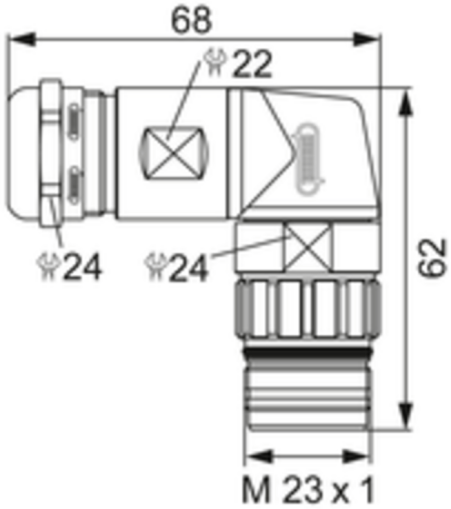

Specifications

General Characteristics

Size	M23 Power
Gender of required insert	Male/Female
Connector diameter	27.2 mm
Upper temperature	125 °C
Lower temperature	-40 °C
Connector locking system	Screw
Protection degree	IP67/IP69K
Mating cycles	>1000
Cable diameter	7-12 mm

Material

Housing material	Copper-Zinc alloy/ Die casting
Housing plating	Nickel plated