Product data sheet

HUMMEL connectors

Twilock, Panel Connector, Male Thread

Front Mounting

7.605.000.000
https://www.ac-solutions.be/en/product/7605000000



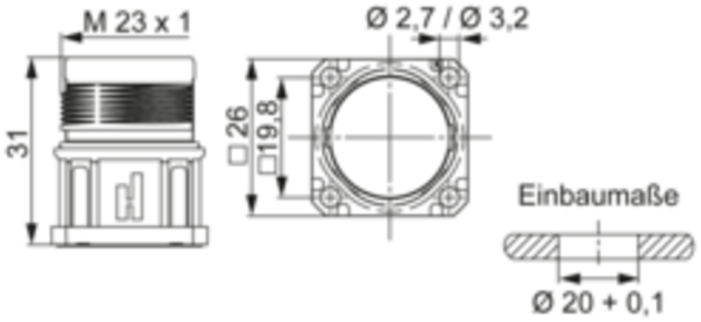

Specifications

General Characteristics

Size	M23 Power
Gender of required insert	Male/Female
Upper temperature	125 °C
Lower temperature	-40 °C
Connector locking system	Twilock
Protection degree	IP67/IP69K
Mating cycles	>1000
Holes	4 holes Ø 2,7 mm
Remark 1	Optional: Flat gasket

Material

Housing material	Copper-Zinc alloy/ Die casting
Housing plating	Nickel plated