Product data sheet

HUMMEL connectors

Panel Connector, Male Thread

single hole mounted,Stainless Steel

7.621.400.000
https://www.ac-solutions.be/en/product/7621400000



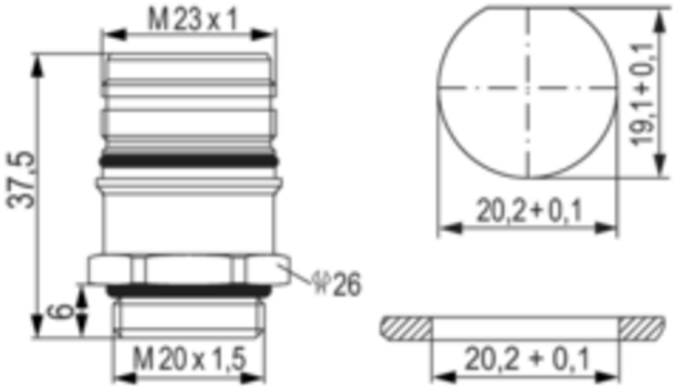

Specifications

General Characteristics

Size	M23 Power
Gender of required insert	Male/Female
Upper temperature	125 °C
Lower temperature	-40 °C
Connector locking system	Screw
Protection degree	IP67/IP69K
Mating cycles	>1000
Thread	M20 x 1,5

Material

Housing material	Copper-Zinc alloy/ Die casting
Housing plating	Nickel plated