Product data sheet

HUMMEL connectors

Panel Connector, Male Thread

Front Mounting

Single hole mounted, M25 x 1,5

7.626.000.000
https://www.ac-solutions.be/en/product/7626000000



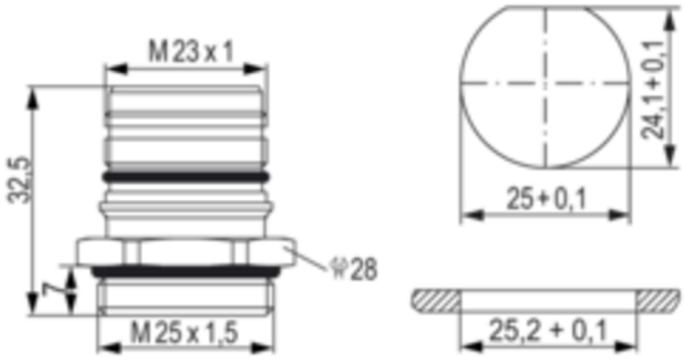

Specifications

General Characteristics

Size	M23 Power
Gender of required insert	Male/Female
Upper temperature	125 °C
Lower temperature	-40 °C
Connector locking system	Screw
Protection degree	IP67/IP69K
Mating cycles	>1000
Thread	M25 x 1,5
Remark 1	Optional: Flat gasket, jam nut M25 x 1,5

Material

Housing material	Copper-Zinc alloy/ Die casting
Housing plating	Nickel plated