Product data sheet

HUMMEL connectors

Right Angle Connector with positioning

7.831.400.000
https://www.ac-solutions.be/en/product/7831400000



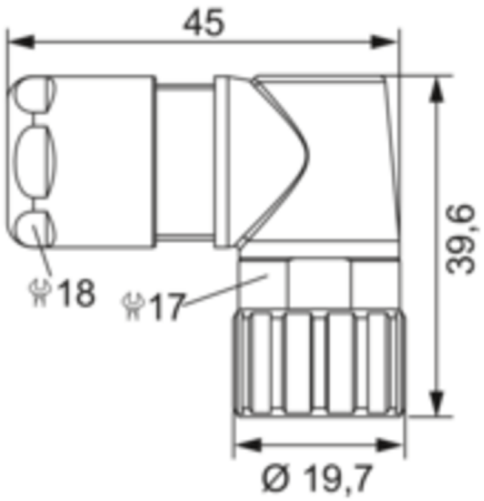

Specifications

General Characteristics

Size	M16
Gender of required insert	Male/Female
Connector diameter	19.7 mm
Upper temperature	125 °C
Lower temperature	-40 °C
Connector locking system	Screw
Protection degree	IP67/IP69K
Mating cycles	> 1000
Cable diameter	5 - 9 mm

Material

Housing material	Copper-Zinc alloy, Die cast
Housing plating	Nickel plated