Product data sheet

HUMMEL connectors

Panel Connector, Male Thread

Stainless Steel

7.840.400.000
https://www.ac-solutions.be/en/product/7840400000



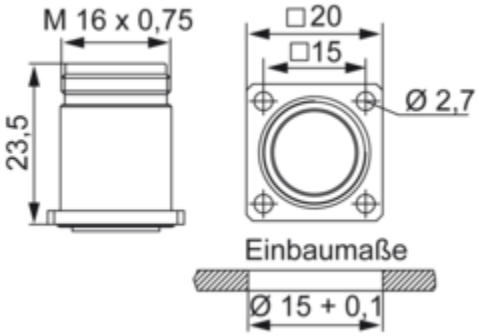

Specifications

General Characteristics

Size	M16
Gender of required insert	Male/Female
Upper temperature	125 °C
Lower temperature	-40 °C
Connector locking system	Screw
Protection degree	IP67/IP69K
Mating cycles	> 1000
Holes	4 holes Ø 2,7 mm
Size flange	20x20 mm

Material

Housing material	Copper-Zinc alloy, Die cast
Housing plating	Nickel plated