Product data sheet

HUMMEL connectors

Panel Connector Male Thread

Rear mounting

4 x thread M 2,5

7.845.000.000
https://www.ac-solutions.be/en/product/7845000000

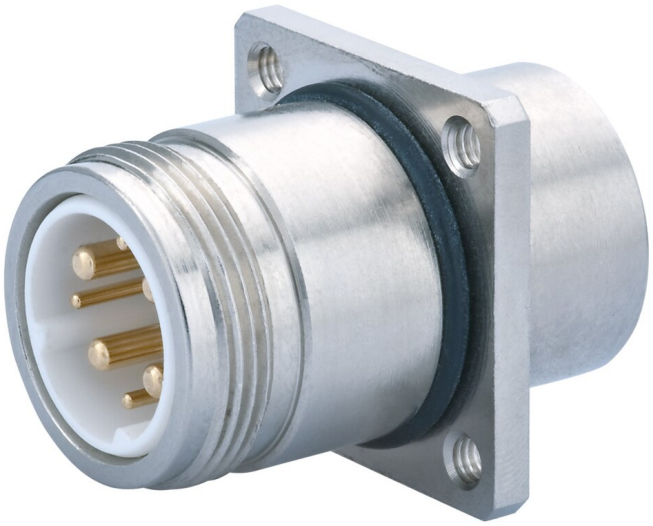

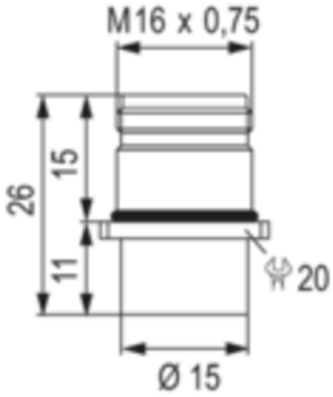

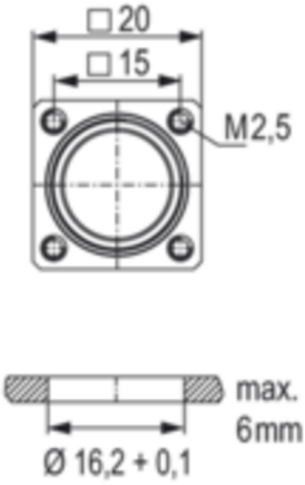

Specifications

General Characteristics

Size	M16
Gender of required insert	Male/Female
Upper temperature	125 °C
Lower temperature	-40 °C
Connector locking system	Screw/Twilock
Protection degree	IP67/IP69K
Mating cycles	> 1000
Size flange	20x20 mm

Material

Housing material	Copper-Zinc alloy, Die cast
Housing plating	Nickel plated