# Product data sheet

## HUMMEL connectors

### Panel Connector Male Thread

## Rear mounting

single hole mounted

7.850.000.000
https://www.ac-solutions.be/en/product/7850000000



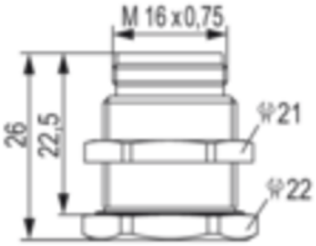


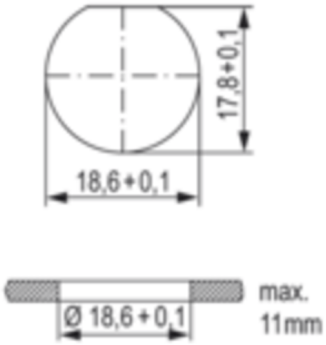


# Specifications

## General Characteristics

| | |
|---|---|
| **Size** | M16 |
| **Gender of required insert** | Male/Female |
| **Upper temperature** | 125 °C |
| **Lower temperature** | -40 °C |
| **Connector locking system** | Screw/Twilock |
| **Protection degree** | IP67/IP69K |
| **Mating cycles** | > 1000 |
| **Remark 1** | Including jam nut |

## Material

| | |
|---|---|
| **Housing material** | Copper-Zinc alloy, Die cast |
| **Housing plating** | Nickel plated |