Product data sheet

HUMMEL connectors

Panel Connector

Front Mount

with vibration protection

7.R41.008.000
https://www.ac-solutions.be/en/product/7r41008000

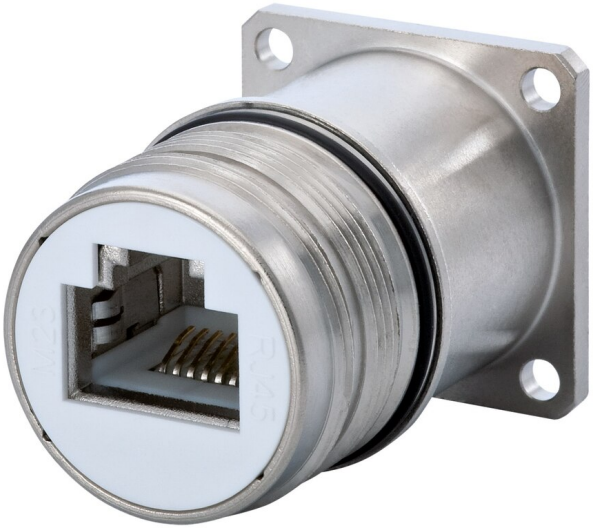

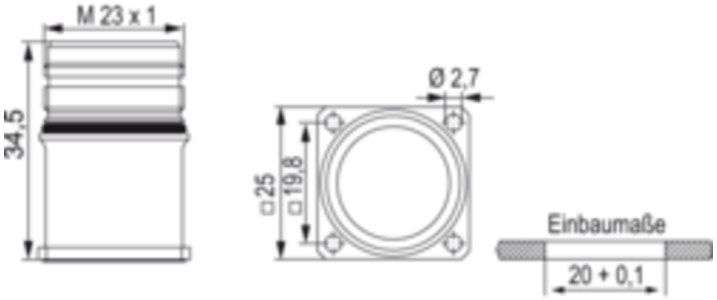

Specifications

General Characteristics

Number of contacts	8
Gender of required insert	Male
Connector diameter	46 mm
Connector locking system	Screw
Protection degree	IP67
Terminal type	Coupler
Remark 1	incl. 8 poles coupler, fully occupied

Electrical parameters

Nominal current	upon request
Nominal voltage	upon request

Material

Housing material	Brass Alloy, Die Cast
Housing plating	Nickel Plated