Product data sheet

HUMMEL connectors

Panel Connector

Rear Mount

Dip solder insert

7.R45.082.000
https://www.ac-solutions.be/en/product/7r45082000

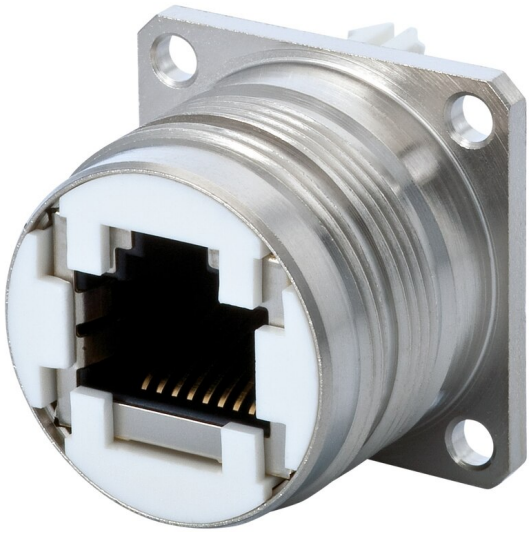

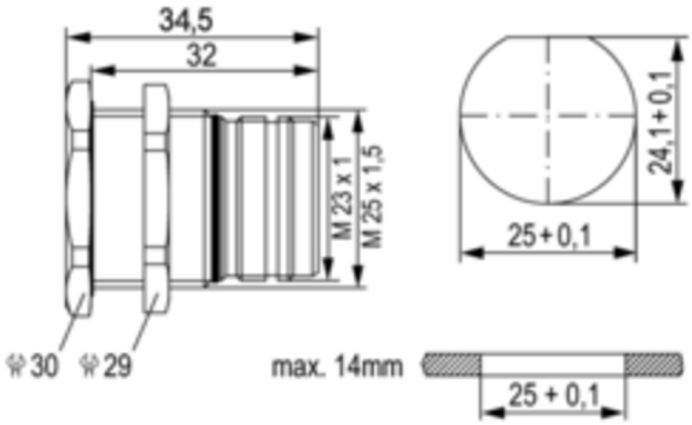

Specifications

General Characteristics

Number of contacts	10 mixed layout
Gender of required insert	Male
Connector diameter	46 mm
Connector locking system	Screw
Protection degree	IP67
Terminal type	Dip-solder
Remark 1	With vibration protection, Incl. 8+2 poles dip solder insert

Electrical parameters

Nominal current	upon request
Nominal voltage	upon request

Material

Housing material	Brass Alloy, Die Cast
Housing plating	Nickel Plated