Product data sheet

Binder connectors

Male panel mount connector

Solder

86 0231 0002 00005
https://www.ac-solutions.be/en/product/860231000200005



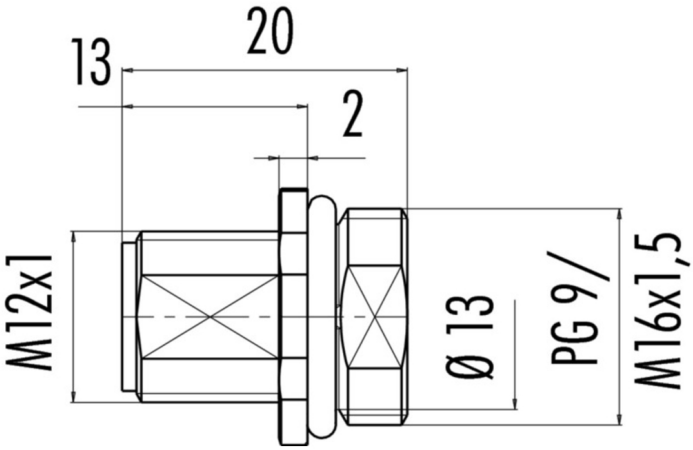

Specifications

General Characteristics

Screw size	M12-A
Series	Sensor
Subseries	713-763
Gender	Male
Number of contacts	5
Contact terminal	Solder
Upper temperature	+85 °C
Lower temperature	-40 °C
Protection degree	IP68
Locking system	Screw (M12-A)
Mating cycles	>100
Connector Diameter	13 mm
Wire-section	0.25 mm²
Fixing thread	M16 x 1,5

Electrical parameters

Product data sheet

Binder connectors

Male panel mount connector

Nominal current	4 A
Nominal voltage	60 V
Impuls voltage	1500 V
Max. contact resistance	3 m?
Pollution degree	3
Overvoltage categorie	II

Material

Material group	II
Material of insert	PA
Material of housing	Zinc diecasting nickel plated
Material of contact	CuZn (Brass)
Plating	Au (Gold)