Product data sheet

Binder connectors

Male panel mount connector

Color code black

99 9107 00 03
https://www.ac-solutions.be/en/product/9991070003

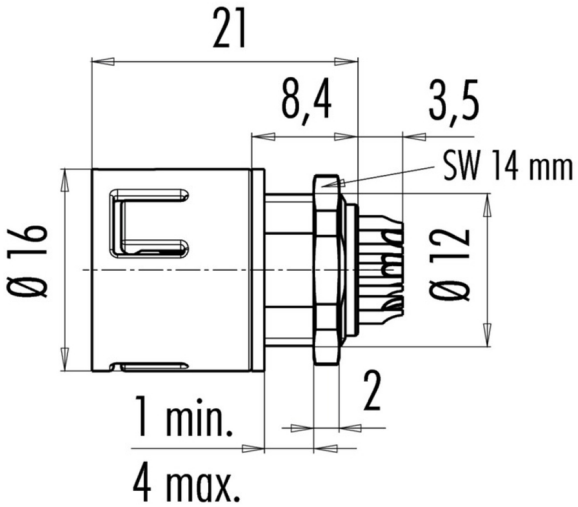

Specifications

General Characteristics

Series	Miniature
Subseries	720
Gender	Male
Number of contacts	3
Contact terminal	Solder
Upper temperature	+85 °C
Lower temperature	-25 °C
Protection degree	IP67
Locking system	Snap-in
Mating cycles	>500
Connector Diameter	16 mm
Wire-section	0.75 mm²

Electrical parameters

Nominal current	7 A
Nominal voltage	250 V

Product data sheet

Binder connectors

Male panel mount connector

Impuls voltage	2500 V
Max. contact resistance	3 m?
Pollution degree	2
Overvoltage categorie	II

Material

Material group	II
Material of insert	PA (UL 94 V-0)
Material of housing	PA (UL 94 V-0)
Material of contact	CuZn (Brass)
Plating	Au (Gold)