Product data sheet

Binder connectors

Male cable connector

Color code red

99 9133 52 12
https://www.ac-solutions.be/en/product/9991335212



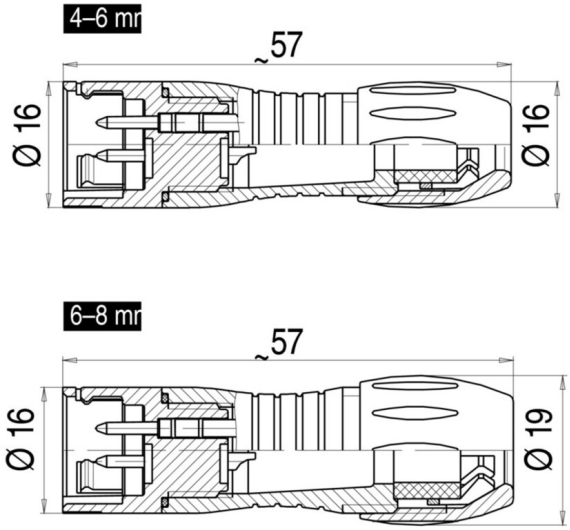

Specifications

General Characteristics

Series	Miniature
Subseries	720
Gender	Male
Number of contacts	12
Contact terminal	Solder
Upper temperature	+85 °C
Lower temperature	-40 °C
Protection degree	IP67
Locking system	Snap-in
Mating cycles	>500
Connector Diameter	19 mm
Cable outlet	6-8 mm
Wire-section	0.25 mm²

Electrical parameters

Nominal current	2 A

Product data sheet

Binder connectors

Male cable connector

Nominal voltage	60 V
Impuls voltage	800 V
Max. contact resistance	3 m?
Pollution degree	2
Overvoltage categorie	II

Material

Material group	II
Material of insert	PA (UL 94 V-0)
Material of housing	PA (UL 94 V-0)
Material of contact	CuZn (Brass)
Plating	Au (Gold)