Product data sheet

HUMMEL connectors

Brass protective cap with chain

For connectors with male thread, 70mm length

A712-7.010.9S0.704
https://www.ac-solutions.be/en/product/a71270109s0704



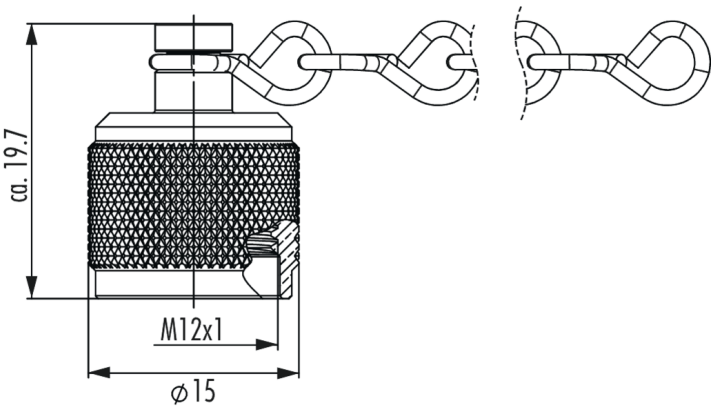

Specifications

General Characteristics

Accessory type	Protective cap
Suitable for	Circular connector with external thread, M12 Power
Length	70
Shape	Round
Locking type	Screw
Seal type	O-ring
Protection class	IP67/IP69K
Temperature range	-40 to +125
Remark	Length 70 mm

Material

Material	Nickel-plated brass
Material seals/o-rings	NBR