# Product data sheet

## HUMMEL connectors

### Straight Connector, Female Thread

## K,L Coding

A712-7.K10.300.000
https://www.ac-solutions.be/en/product/a7127k10300000



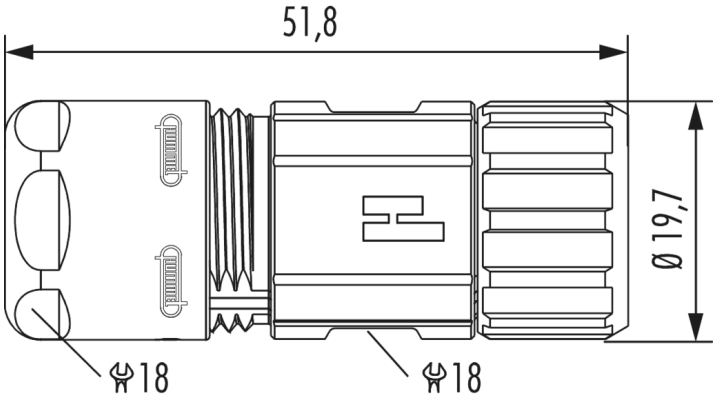


## Specifications

### General Characteristics

| | |
|---|---|
| **Size** | M12 Power |
| **Gender of required insert** | Female |
| **Connector diameter** | 19.7 mm |
| **Upper temperature** | 125 °C |
| **Lower temperature** | -40 °C |
| **Connector locking system** | Screw |
| **Protection degree** | IP67/IP69K |
| **Mating cycles** | >100 |
| **Cable diameter** | 3-6 mm |

### Material

| | |
|---|---|
| **Housing material** | Brass/Die Cast |
| **Housing plating** | Nickel plated |