Product data sheet

HUMMEL connectors

Panel connector male thread, single hole front mounted, orientable

K,L Coding

A712-7.K42.200.000
https://www.ac-solutions.be/en/product/a7127k42200000



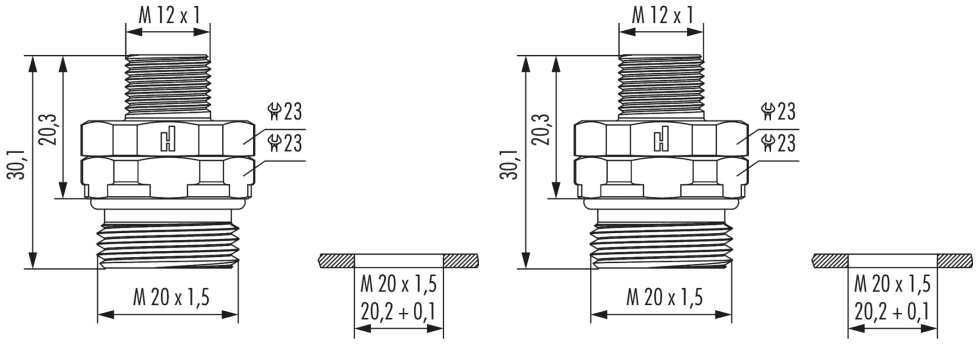

Specifications

General Characteristics

Size	M12 Power
Gender of required insert	Male
Upper temperature	+125 °C
Lower temperature	-40 °C
Connector locking system	Screw
Protection degree	IP67/IP69K
Mating cycles	>100
Thread	M16

Material

Housing material	Brass/Die Cast
Housing plating	Nickel plated