# Product data sheet

## HUMMEL connectors

### Panel Connector male thread, front mounting

## S,T Coding

with flange 25x25 4x2,7mm

A712-7.S40.000.000
https://www.ac-solutions.be/en/product/a7127s40000000



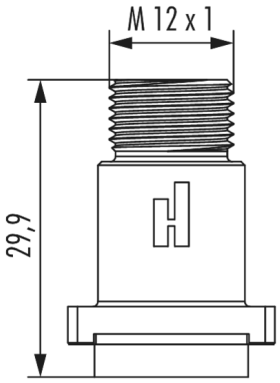


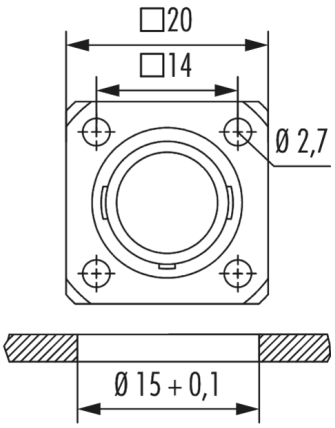


# Specifications

## General Characteristics

| | |
|---|---|
| **Size** | M12 Power |
| **Gender of required insert** | Male |
| **Upper temperature** | 85 °C |
| **Lower temperature** | -40 °C |
| **Connector locking system** | Screw |
| **Protection degree** | IP67/IP69K |
| **Mating cycles** | >100 |
| **Size flange** | 25x25 mm |

## Material

| | |
|---|---|
| **Housing material** | Brass/Die Cast |
| **Housing plating** | Nickel plated |