Product data sheet

HUMMEL connectors

Panel connector female thread, single hole front mounted

S,T Coding, with lock nut "rotation protection"

A712-7.S44.000.00G
https://www.ac-solutions.be/en/product/a7127s4400000g



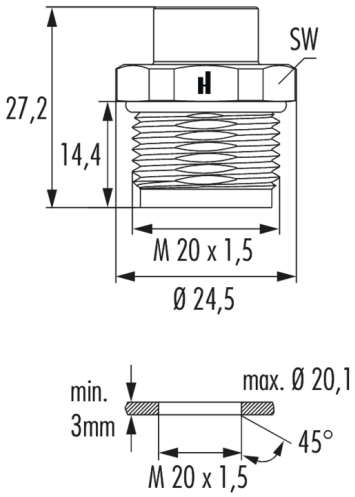

Specifications

General Characteristics

Size	M12 Power
Gender of required insert	Female
Upper temperature	85 °C
Lower temperature	-40 °C
Connector locking system	Screw
Protection degree	IP67/IP69K
Mating cycles	>100
Thread	M20

Material

Housing material	Brass/Die Cast
Housing plating	Nickel plated