Product data sheet

Ilme connectors

male contact, 35mm², silver, turned crimp, 300A, series C30

C30MA 35 P
https://www.ac-solutions.be/en/product/c30ma35p

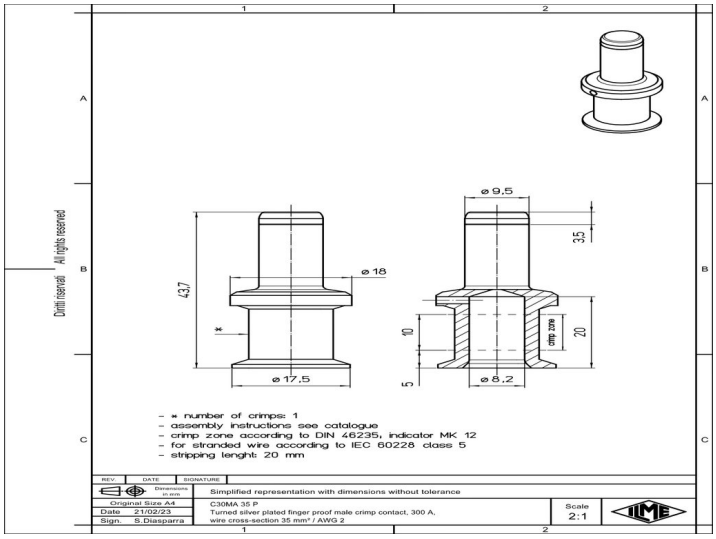

Specifications

General characteristics

Connection type	Turned crimp
Contact type (gender)	Male
Min. Cross section	35 mm²
Max. Cross section	35 mm²
AWG size	2
Diameter male contact	9.5 mm
Wire strip length	20 mm

Electrical parameters

Max. rated current	300 A

Material

Material contact	Copper alloy
Plating of contact	Silver