# Product data sheet

## ILME connectors

### mounting frame, size 44.27, IP67 alu, for bulkhead mounting housing C7I 06

## for V-Type enclosures

C7 06 FL
https://www.ac-solutions.be/en/product/c706fl



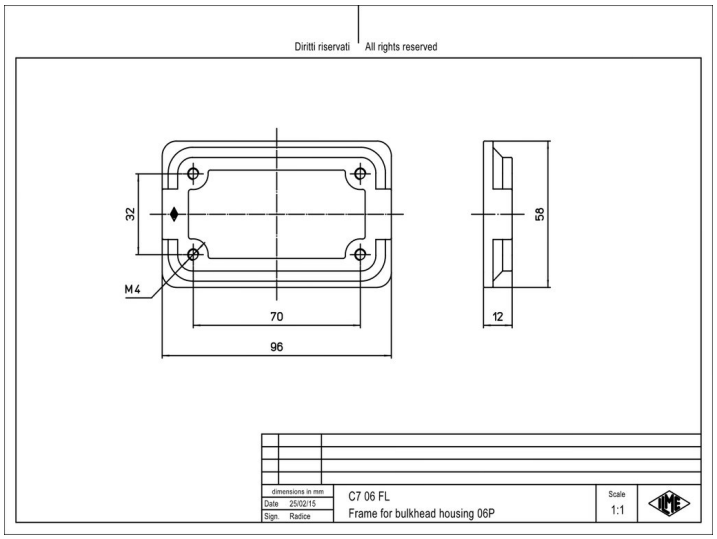


# Specifications

## General characteristics

| | |
|---|---|
| **Accessory type** | Counterflange |
| **Size** | 44.27 |
| **Operation lower temperature** | -40 °C |
| **Operation upper temperature** | 125 °C |