Product data sheet

ILME connectors

cable anchorage, for MIXO frames, for shielded cables, size 57.27

CR 10 STA
https://www.ac-solutions.be/en/product/cr10sta

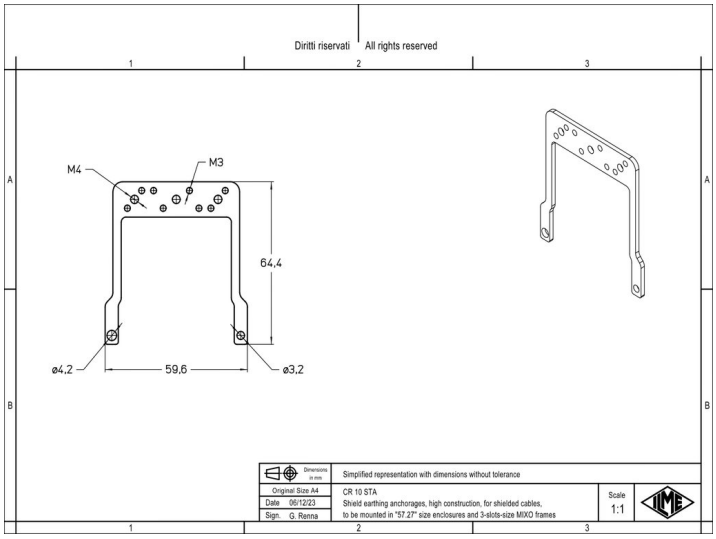

Specifications

General characteristics

Accessory type	Cable anchorage
Remark	For MIXO frames, for shielded cables