Product data sheet

ILME connectors

hood, size 44.27, LS-type alu, 1 lever, 1xM25 top

MHVN 06 LG25
https://www.ac-solutions.be/en/product/mhvn06lg25



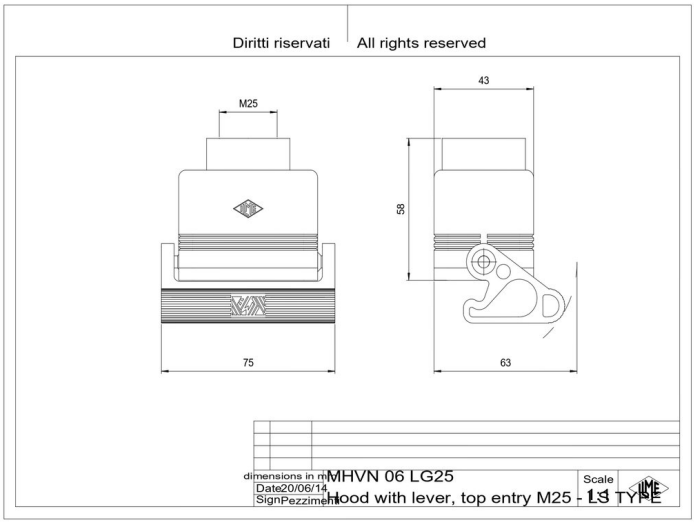

Specifications

General characteristics

Enclosure type	Hood
Size	44.27
Enclosure series	LS-TYPE
Closing type	With 1 lever
Locking mechanism	Single locking lever
Protection degree	IP65
Ambient lower temperature	-40 °C
Ambient upper temperature	125 °C
Operation lower temperature	-40 °C
Operation upper temperature	125 °C
Cable entry type	top cable entry
Cable entry size	M25
Position cable feed	Top entry
Height	58.5 mm
Width	63 mm
Length	75 mm

Material

Product data sheet

ILME connectors

hood, size 44.27, LS-type alu, 1 lever, 1xM25 top

Material housing	Die cast aluminium alloy
Coating housing	With powder coating
Inflammability class of insulation material acc. with UL94	V2
Extra information	Corrosion resistant,UV resistant,With interlocking device