# Product data sheet

## ILME connectors

### hood, size 57.27, LS-type alu, 2 levers, 1xM25 top

MHVN 10 G25
https://www.ac-solutions.be/en/product/mhvn10g25



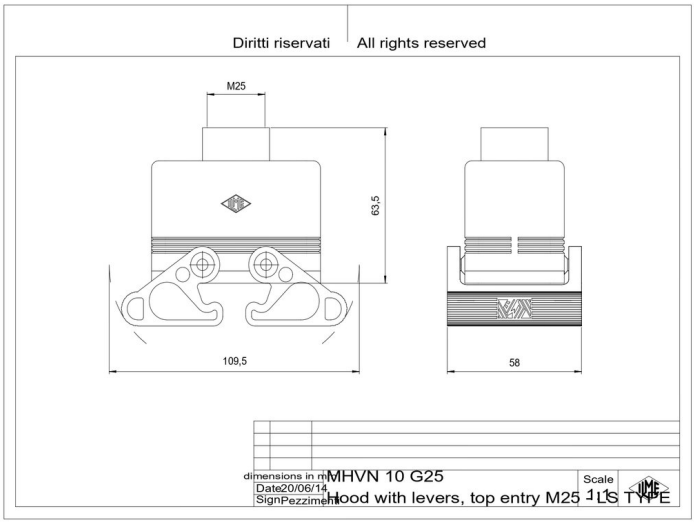


# Specifications

## General characteristics

| | |
|---|---|
| **Enclosure type** | Hood |
| **Size** | 57.27 |
| **Enclosure series** | LS-TYPE |
| **Closing type** | With 2 levers |
| **Locking mechanism** | Double locking levers |
| **Protection degree** | IP65 |
| **Ambient lower temperature** | -40 °C |
| **Ambient upper temperature** | 125 °C |
| **Operation lower temperature** | -40 °C |
| **Operation upper temperature** | 125 °C |
| **Cable entry type** | top cable entry |
| **Cable entry size** | M25 |
| **Position cable feed** | Top entry |
| **Height** | 63.5 mm |
| **Width** | 58 mm |
| **Length** | 109.5 mm |

## Material

# Product data sheet

## ILME connectors

### hood, size 57.27, LS-type alu, 2 levers, 1xM25 top

| | |
|---|---|
| **Material housing** | Die cast aluminium alloy |
| **Coating housing** | With powder coating |
| **Inflammability class of insulation material acc. with UL94** | V2 |
| **Extra information** | Corrosion resistant,UV resistant,With interlocking device |