Product data sheet

ILME connectors

surface mounting housing, angled, size 21.21, CKH plastic, 1 lever, 1xM25 side

MKH AP25
https://www.ac-solutions.be/en/product/mkhap25

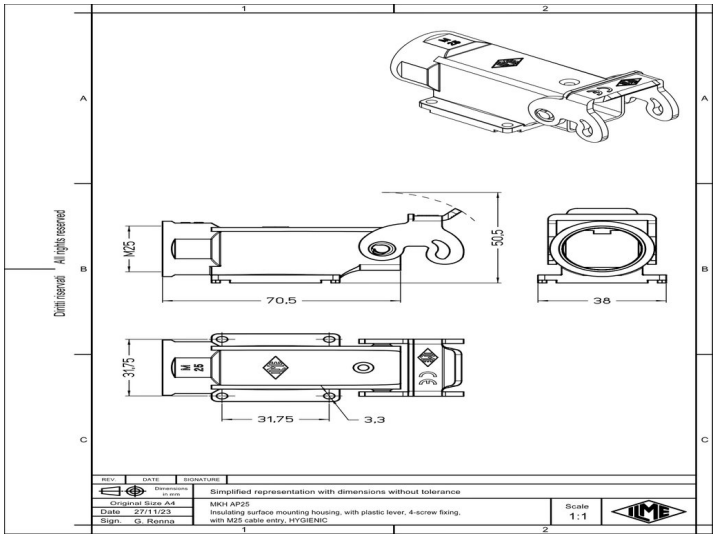

Specifications

General characteristics

Enclosure type	Angled surface mounting housing
Size	21.21
Enclosure series	CKH
Closing type	With 1 lever
Locking mechanism	Single locking lever
Protection degree	IP44 | IP66 / IP67 / IP69
Ambient lower temperature	-40 °C
Ambient upper temperature	70 °C
Operation lower temperature	-40 °C
Operation upper temperature	70 °C
Cable entry type	side cable entry
Cable entry size	M25
Position cable feed	Side entry
Height	50.5 mm
Width	38 mm
Length	70.5 mm

Material

Product data sheet

ILME connectors

surface mounting housing, angled, size 21.21, CKH plastic, 1 lever, 1xM25 side

Material housing	Polyamide