Product data sheet

Ilme connectors

bulkhead mounting housing, angled, size 21.21, CK plastic, 1 lever, 1xM25 side

MKX IAP25
https://www.ac-solutions.be/en/product/mkxiap25

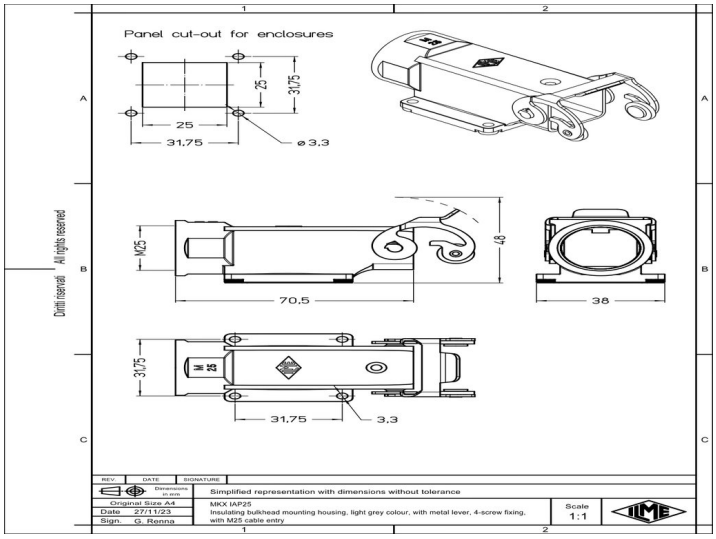

Specifications

General characteristics

Enclosure type	Angled bulkhead mounting housing
Size	21.21
Enclosure series	CK
Closing type	With 1 lever
Locking mechanism	Single locking lever
Protection degree	IP44 | IP66 / IP67 / IP69
Ambient lower temperature	-40 °C
Ambient upper temperature	125 °C
Operation lower temperature	-40 °C
Operation upper temperature	125 °C
Cable entry type	side cable entry
Cable entry size	M25
Position cable feed	Side entry
Height	48 mm
Width	38 mm
Length	70.5 mm

Material

Product data sheet

Ilme connectors

bulkhead mounting housing, angled, size 21.21, CK plastic, 1 lever, 1xM25 side

Material housing	Thermoplastic