Product data sheet

Binder connectoren

Male angled connector

Plastic version

09 0139 78 05
https://www.ac-solutions.be/nl/product/0901397805



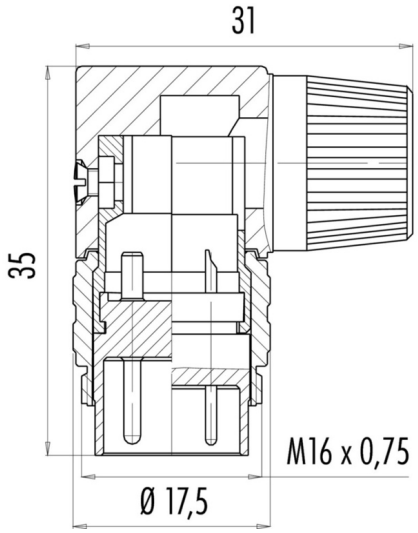

Specificaties

General Characteristics

Screw size	M16
Series	Miniature
Subseries	682
Gender	Male
Number of contacts	5
Contact terminal	Solder
Upper temperature	+85 °C
Lower temperature	-40 °C
Protection degree	IP40
Locking system	Screw (M16)
Mating cycles	>500
Connector Diameter	17.5 mm
Cable outlet	6-8 mm
Wire-section	0.75 mm²
Remark*	*In case of pollution degree 2, overvoltage category II rated voltage is reduced to 32 V.

Product data sheet

Binder connectoren

Male angled connector

Electrical parameters

Nominal current	6 A
Nominal voltage	250 (32) V
Impuls voltage	1500 V
Max. contact resistance	3 m?
Pollution degree	1 (2)*
Overvoltage categorie	I (II)*

Material

Material group	III
Material of insert	PBT (UL 94 V-0)
Material of housing	PA (UL 94 HB)
Material of contact	CuZn (Brass)
Plating	Au (Gold)