Product data sheet

Binder connectoren

Female panel mount connector

6+PE, crimp termination

09 0204 00 07
https://www.ac-solutions.be/nl/product/0902040007

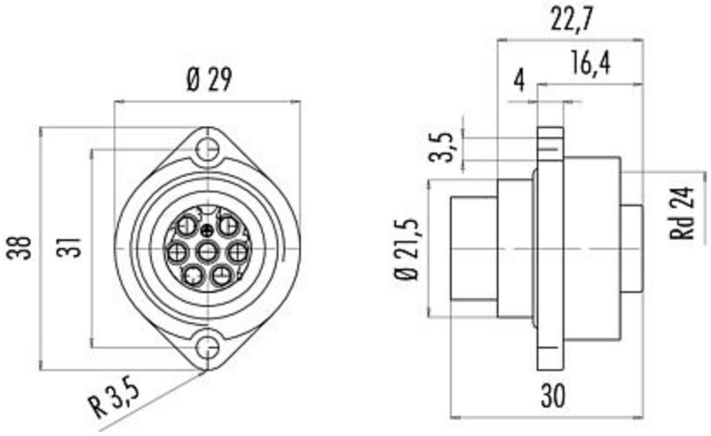

Specificaties

General Characteristics

Screw size	RD24
Series	Power
Subseries	692-693
Gender	Female
Number of contacts	7
Contact terminal	Crimp
Upper temperature	+100 °C
Lower temperature	-40 °C
Protection degree	IP67
Locking system	Screw (RD24)
Mating cycles	>500
Connector Diameter	21.5 mm
Wire-section	0,14 - 1,5 mm²

Electrical parameters

Product data sheet

Binder connectoren

Female panel mount connector

Nominal current	10 A
Nominal voltage	250 V
Impuls voltage	4000 V
Pollution degree	3
Overvoltage categorie	III

Material

Material group	III
Material of insert	PBT