Product data sheet

Binder connectoren

Female panel mount connector

IP40

09 4832 25 08
https://www.ac-solutions.be/nl/product/0948322508



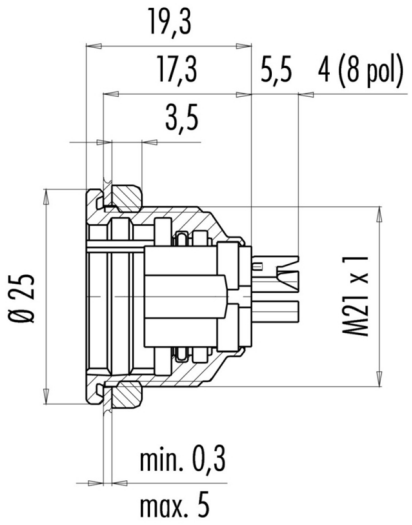

Specificaties

General Characteristics

Series	Miniature
Subseries	440
Gender	Female
Number of contacts	8
Contact terminal	Solder
Upper temperature	+85 °C
Lower temperature	-40 °C
Protection degree	IP40
Locking system	Push-Pull
Mating cycles	>1000
Connector Diameter	25 mm
Wire-section	0.75 mm²
Remark*	*In case of pollution degree 2, overvoltage category II rated voltage is reduced to 32 V.

Electrical parameters

Product data sheet

Binder connectoren

Female panel mount connector

Nominal current	5 A
Nominal voltage	60 (32) V
Impuls voltage	500 V
Max. contact resistance	3 m?
Pollution degree	1 (2)*
Overvoltage categorie	I (II)*

Material

Material group	III
Material of insert	PBT (UL 94 V-0)
Material of housing	CuZn (Brass nickel plated)
Material of contact	CuSn (Bronze)
Plating	Au (Gold)