# Product data sheet

## HUMMEL connectoren

### Twilock, Straight Connector, Female Thread

7.166.600.000
https://www.ac-solutions.be/nl/product/7166600000



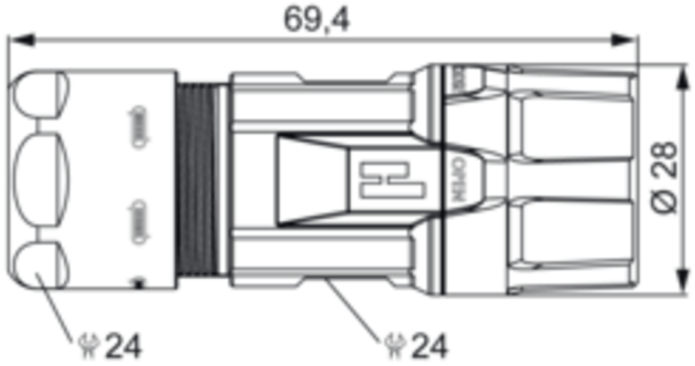


# Specificaties

## General Characteristics

| | |
|---|---|
| **Size** | M23 Signal |
| **Gender of required insert** | Male/Female |
| **Connector diameter** | 28 mm |
| **Upper temperature** | 125 °C |
| **Lower temperature** | -40 °C |
| **Connector locking system** | Twilock |
| **Protection degree** | IP67/IP69K |
| **Mating cycles** | >1000 |
| **Cable diameter** | 11 - 17 mm |

## Material

| | |
|---|---|
| **Housing material** | Copper-Zinc alloy, Die casting |
| **Housing plating** | Nickel plated |