Product data sheet

HUMMEL connectoren

Right Angle Connector, Female Thread with positioning

7.300.600.000
https://www.ac-solutions.be/nl/product/7300600000



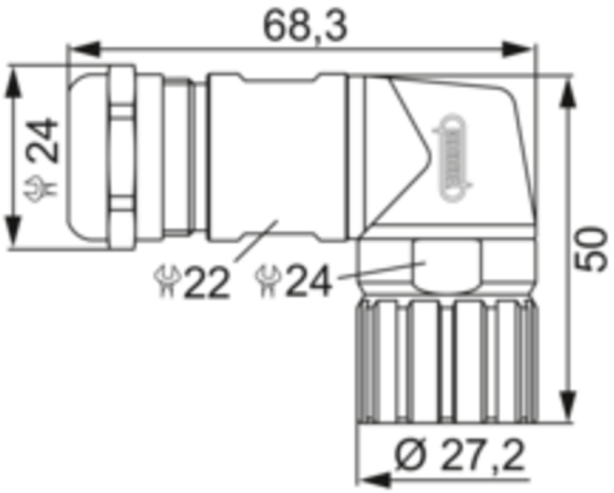

Specificaties

General Characteristics

Size	M23 Signal
Gender of required insert	Male/Female
Connector diameter	27.2 mm
Upper temperature	125 °C
Lower temperature	-40 °C
Connector locking system	Screw
Protection degree	IP67/IP69K
Mating cycles	> 1000
Cable diameter	10 - 14 mm

Material

Housing material	Copper-Zinc alloy, Die casting
Housing plating	Nickel plated