Product data sheet

HUMMEL connectoren

Panel Connector, Male Thread

single hole mounted

for insert with pins/sockets

7.425.000.000
https://www.ac-solutions.be/nl/product/7425000000



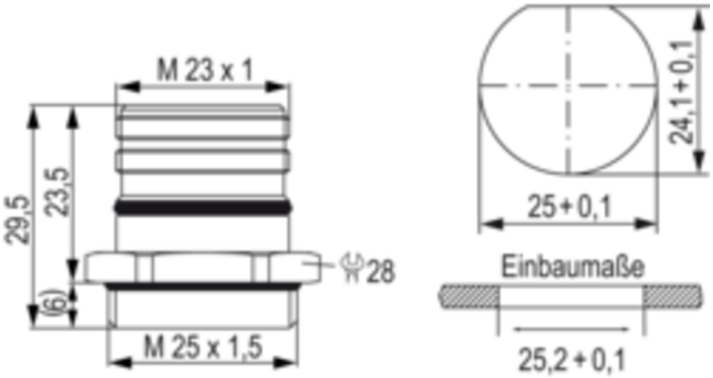

Specificaties

General Characteristics

Size	M23 Signal
Gender of required insert	Male/Female
Upper temperature	125 °C
Lower temperature	-40 °C
Connector locking system	Screw
Protection degree	IP67/IP69K
Mating cycles	> 1000
Thread	M25 x 1,5
Remark 1	Optional: Flat gasket, jam nut M 25 x 1,5

Material

Housing material	Copper-Zinc alloy, Die casting
Housing plating	Nickel plated