Product data sheet

HUMMEL connectoren

Right Angle Panel Connector, Male Thread

335° rotating

hole mounted, M20 x 1,5

7.431.000.000
https://www.ac-solutions.be/nl/product/7431000000



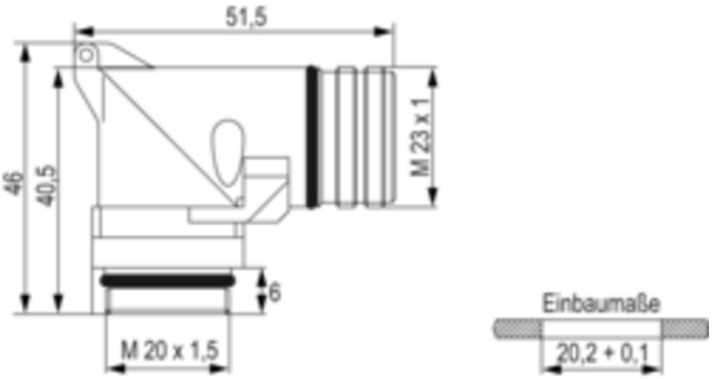

Specificaties

General Characteristics

Size	M23 Signal
Gender of required insert	Male/Female
Upper temperature	125 °C
Lower temperature	-40 °C
Connector locking system	Screw
Protection degree	IP67/IP69K
Mating cycles	> 1000
Thread	M20 x 1,5

Material

Housing material	Copper-Zinc alloy, Die casting
Housing plating	Nickel plated