Product data sheet

HUMMEL connectoren

Panel Connector with Radius Flange

with anti-vibration O-Ring and flat body gasket

Ø 58 mm

7.490.000.000
https://www.ac-solutions.be/nl/product/7490000000



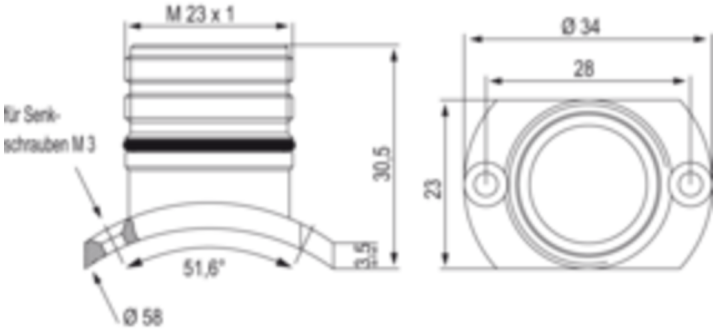

Specificaties

General Characteristics

Size	M23 Signal
Gender of required insert	Male/Female
Upper temperature	125 °C
Lower temperature	-40 °C
Connector locking system	Screw
Protection degree	IP67/IP69K
Mating cycles	> 1000

Material

Housing material	Copper-Zinc alloy, Die casting
Housing plating	Nickel plated