Product data sheet

HUMMEL connectoren

Twilock, Straight Connector, Female Thread

7.556.500.000
https://www.ac-solutions.be/nl/product/7556500000



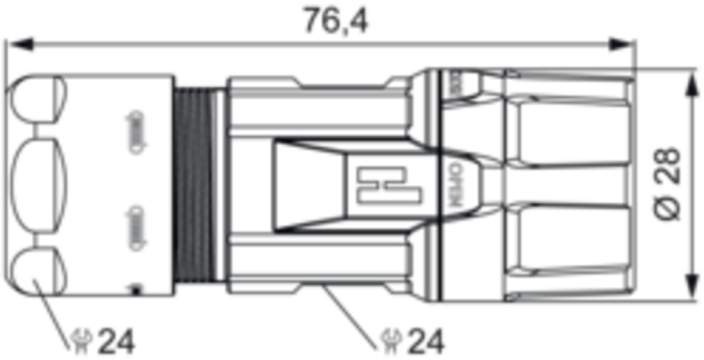

Specificaties

General Characteristics

Size	M23 Power
Gender of required insert	Male/Female
Connector diameter	28 mm
Upper temperature	125 °C
Lower temperature	-40 °C
Connector locking system	Twilock
Protection degree	IP67/IP69K
Mating cycles	>1000
Cable diameter	7-12 mm

Material

Housing material	Copper-Zinc alloy/ Die casting
Housing plating	Nickel plated