Product data sheet

HUMMEL connectoren

Twilock-S, Straight Connector, Female Thread

4+3+PE, insert for socket, power

7.716.843.00S
https://www.ac-solutions.be/nl/product/771684300s



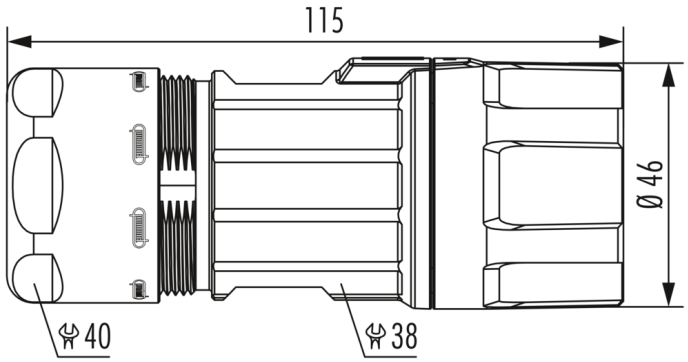

Specificaties

General Characteristics

Number of contacts	8 mixed layout
Gender of required insert	Female
Connector locking system	Twilock
Protection degree	IP67/IP69K
Mating cycles	>500
Terminal type	Crimp
Cable diameter	21-28 mm
Wire section (a)	1-4 mm
Wire section (b)	1,5-16 mm
Crimp contacts (to be ordered separately)	4x2mm & 4x3,6mm
Contact diameter (a)	2
Contact diameter (b)	3.6
Remark 1	Compatible with Speedtec

Electrical parameters

Product data sheet

HUMMEL connectoren

Twilock-S, Straight Connector, Female Thread

Nominal current (a)	28 A
Nominal current (b)	55 A
Insulation resistance	> 10^{13}
Nominal voltage (degree of pollution 3) (a)	300 V
Nominal voltage (degree of pollution 3) (b)	600 V
Test voltage (a)	2500 V
Test voltage (b)	4000 V
Max. contact resistance (a)	3 m?
Max. contact resistance (b)	1 m?

Material

Housing material	Copper-Zinc alloy/ Die casting
Housing plating	Nickel plated