Product data sheet

HUMMEL connectoren

Right Angle Connector with positioning

7.831.500.000
https://www.ac-solutions.be/nl/product/7831500000



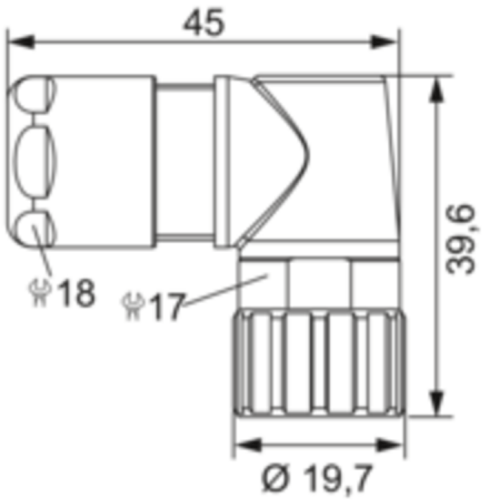

Specificaties

General Characteristics

Size	M16
Gender of required insert	Male/Female
Connector diameter	19.7 mm
Upper temperature	125 °C
Lower temperature	-40 °C
Connector locking system	Screw
Protection degree	IP67/IP69K
Mating cycles	> 1000
Cable diameter	8 - 11 mm

Material

Housing material	Copper-Zinc alloy, Die cast
Housing plating	Nickel plated