Product data sheet

Binder connectoren

Male cable connector

79 0235 20 07
https://www.ac-solutions.be/nl/product/7902352007



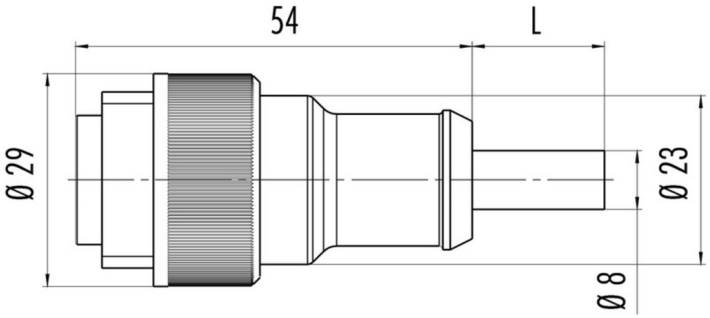

Specificaties

General Characteristics

Screw size	RD24
Series	Power
Subseries	692-693
Gender	Male
Number of contacts	7
Contact terminal	Crimp, moulded
Upper temperature	+80 °C
Lower temperature	-25 °C
Protection degree	IP67
Locking system	Screw (RD24)
Mating cycles	>500
Connector Diameter	29 mm
Cable Length	2 m
Cable diameter	9,7 mm
Wire-section	7 x 0,75 mm²

Electrical parameters

Nominal current	8 A

Product data sheet

Binder connectoren

Male cable connector

Nominal voltage	250 V
Impuls voltage	4000 V
Max. contact resistance	5 m?
Pollution degree	3
Overvoltage categorie	III

Material

Material group	III
Material of insert	PA 12
Material of housing	PUR
Material of contact	CuZn (Brass)
Plating	Ag (Silver)