Product data sheet

Binder connectoren

Male angled connector

79 6251 200 14
https://www.ac-solutions.be/nl/product/79625120014



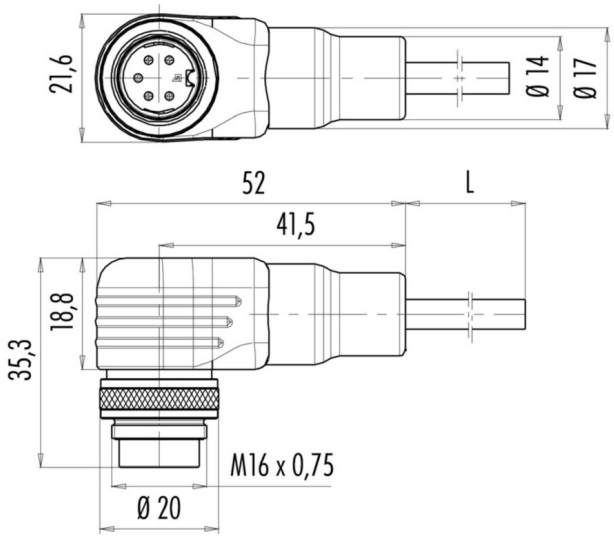

Specificaties

General Characteristics

Screw size	M16
Series	Miniature
Subseries	425
Gender	Male
Number of contacts	14
Contact terminal	Solder, moulded
Upper temperature	+70 °C
Lower temperature	-25 °C
Protection degree	IP67
Locking system	Screw (M16)
Mating cycles	>500
Connector Diameter	20 mm
Cable Length	2 m
Cable diameter	8 mm
Wire-section	8 x 0,25 / 2 x 0,5 mm²
Remark*	*In case of pollution degree 2, overvoltage category II rated voltage is reduced to 32 V.

Electrical parameters

Product data sheet

Binder connectoren

Male angled connector

Nominal current	3 A
Nominal voltage	60 (32) V
Impuls voltage	500 V
Max. contact resistance	3 m?
Pollution degree	1 (2)*
Overvoltage categorie	I (II)*

Material

Material group	III
Material of insert	PBT (UL 94 V-0)
Material of housing	PUR
Material of contact	CuZn (Brass)